ROHS

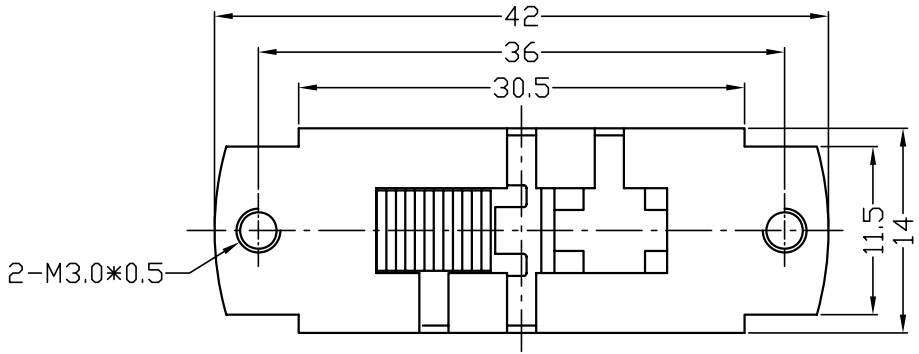

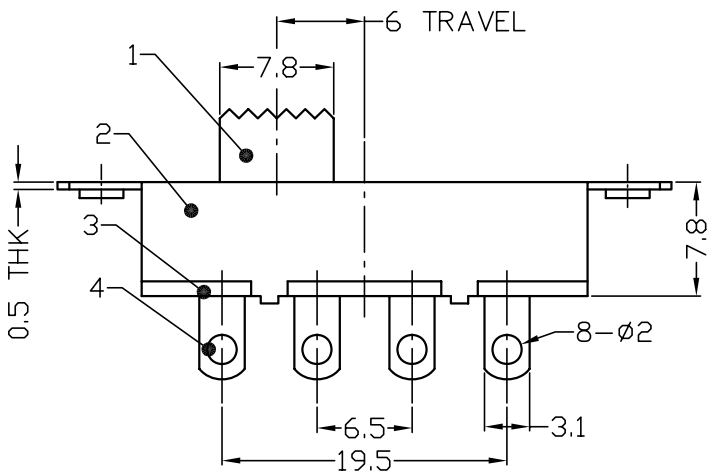

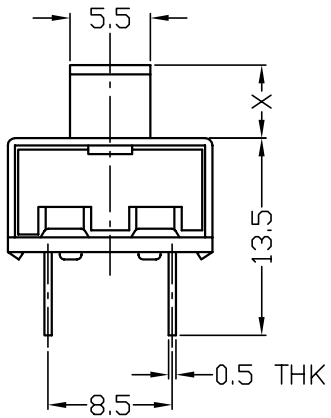

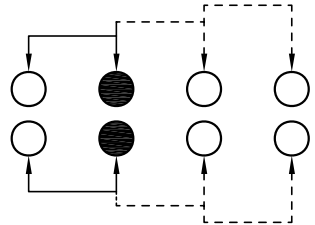

SCHEMATIC(NON-SHORTING)

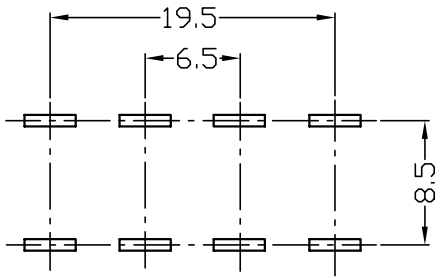

P.C.B LAYOUT